MODÈLE GENEQ TYPE B

Part #	Description	Guide
01	Pressure Chamber	GF
02	Pressure Chamber Cap	GF
03	Pressure Chamber Elbow	GF
04	Pressure Chamber Gasket 2.60 (bott	GF
05	Pressure Chamber Bleeder Stem	GF
06	Air Bleeder Cap with Gasket	GF
07	Gauge	GF
11	Needle Valve Stem	G
12	Needle Valve Nut	G
13	Needle Valve Lever	G
14	Needle Valve Spacer	GF
15	Needle Valve O Ring	GF
16	Needle Valve Spring	GF
17	Valve Spring Retainer Nut	GF
18A	Valve Seat O Ring	G
18	Valve Seat Assembly (complete)	GF
19	Cover	G
20	Cover O Ring	GF
21	Cover Petcock	GF
22	Clamp Complete (specify model)	G
23	Clamp Tab & Stud	G
29	Base with Molded Handles	G
31	Calibrated Vessel	GF
32	Calibration Outside Tube	GF
33	Calibration Inside Tube	GF
34	Strike Off Bar	GF
35	Tamping Rod	GF
36	Syringe	GF
37	Gauge Safety Glass (specify diamet	GF
38P	Molded Plastic Carrying Case	GF
57	Gasket Kit withouth #20	GF
60	Ultra Pump	GF
61	Check Valve with Gasket	G
62	Pump O Ring Kit (specify model)	GF
63	16 oz. Rubber Mallet	GF
60A	Ultra Pump Adapter to White/ELE	ELE

Guide Key

G	Type B Geneq
ELE	Soiltest
F	Forney

Air-Meter (TYPE B)

Model #FOLA316GEN

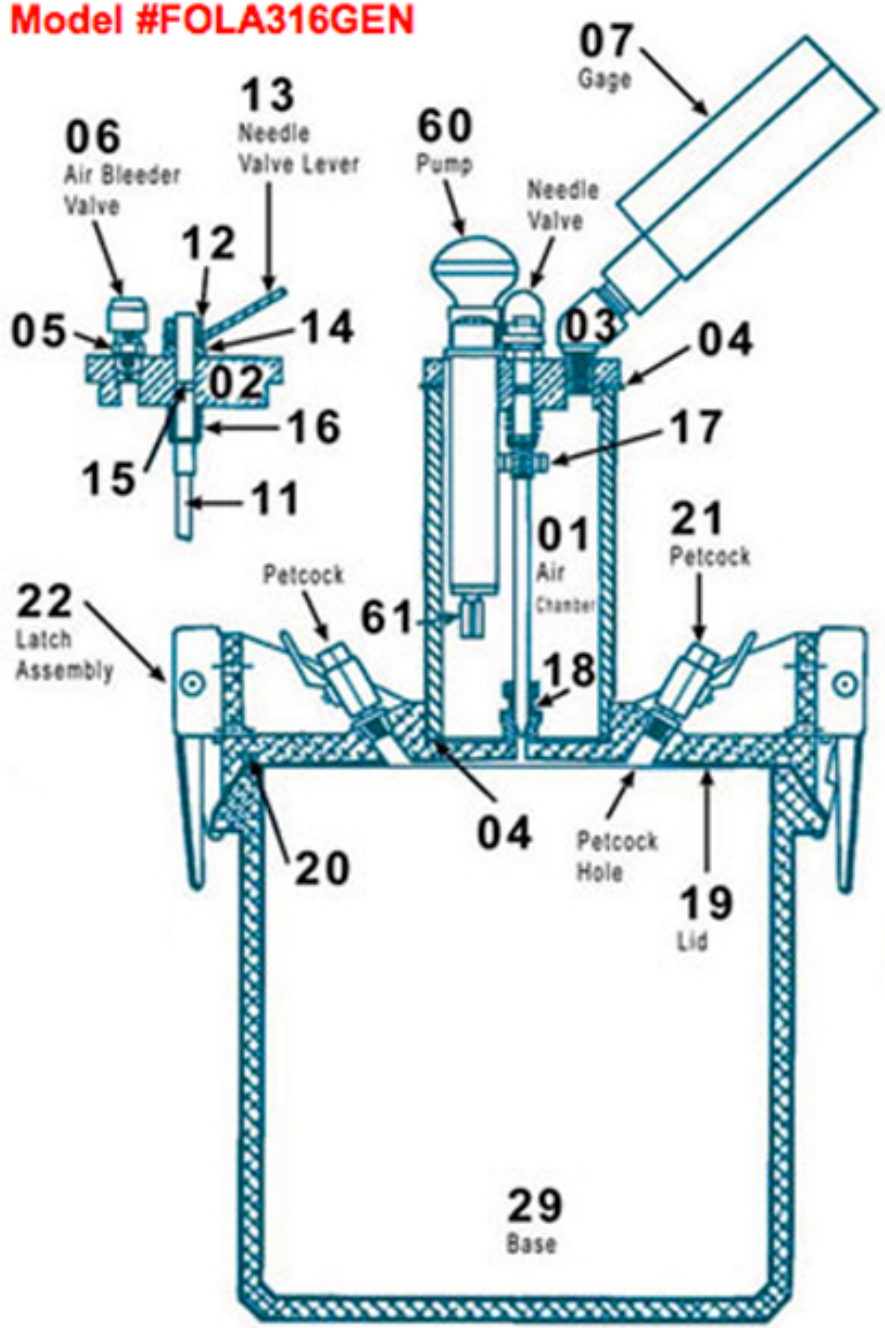

Airmeter Model AIRM2300

Replacement Parts

No.	DESCRIPTION	QTY
2302	Pressure Chamber Cap.	1
2303	Pressure Chamber Elbow	1
2304	Pressure Chamber Gasket	1
2305	Pressure Chamber Air Release Stem	1
2306	Air Release Cap & Gasket	1
2306A	Air Release Gasket	1
2307	Gauge Complete	1
2308	Gauge Glass Gasket	1
2309OR	Pump O'Ring	1
2311	"Hands Free" Valve	1
2312	Chanber Fitting	1
2313	Nylon Tube	1
2314	O'ring for 2311 "Hands Free" Valve	1
2315	Teflon Sleeve for Chamber Gauge	2
2319	Cover Casting	1
2320	O'ring for 2319 Cover	1
2321	Threaded Petcock	1
2321A	Unthreaded Petcock	1
2322	Cover Clamp with Stud	4
2323	Cover Clamp Nut	4
2324	Cover Clamp Trunnion	4
2325	Cover Clamp Spring	4
2326	Cover Clamp Toggle	4
2327	Cover Clamp Set Screw	8
2328	Set Screw Lock Nut	8
2329	Base Casting, w/o handles	1
2337	Gauge Glass (Marsh)	1
2339	Check Valve Assembly	1
2339OR	O'ring for Valve	1
2340	Air Pump Complete	1
2340A	O'ring for Pump Tube	1
2340AD	Adaptator of O'ring Pump	1
2300KC	Calibration Kit	1

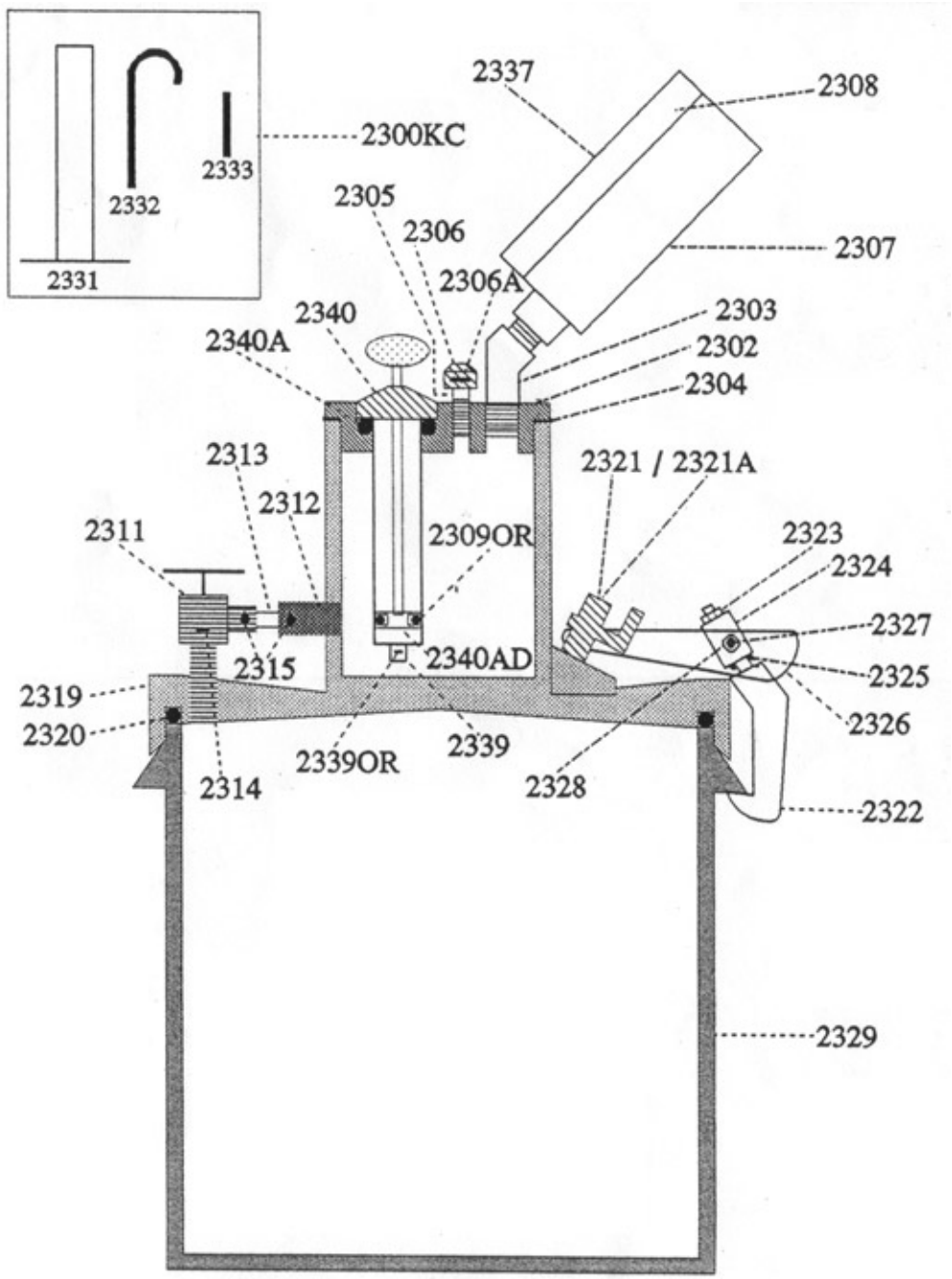

Airmeter Model FORNEY
Replacement Parts

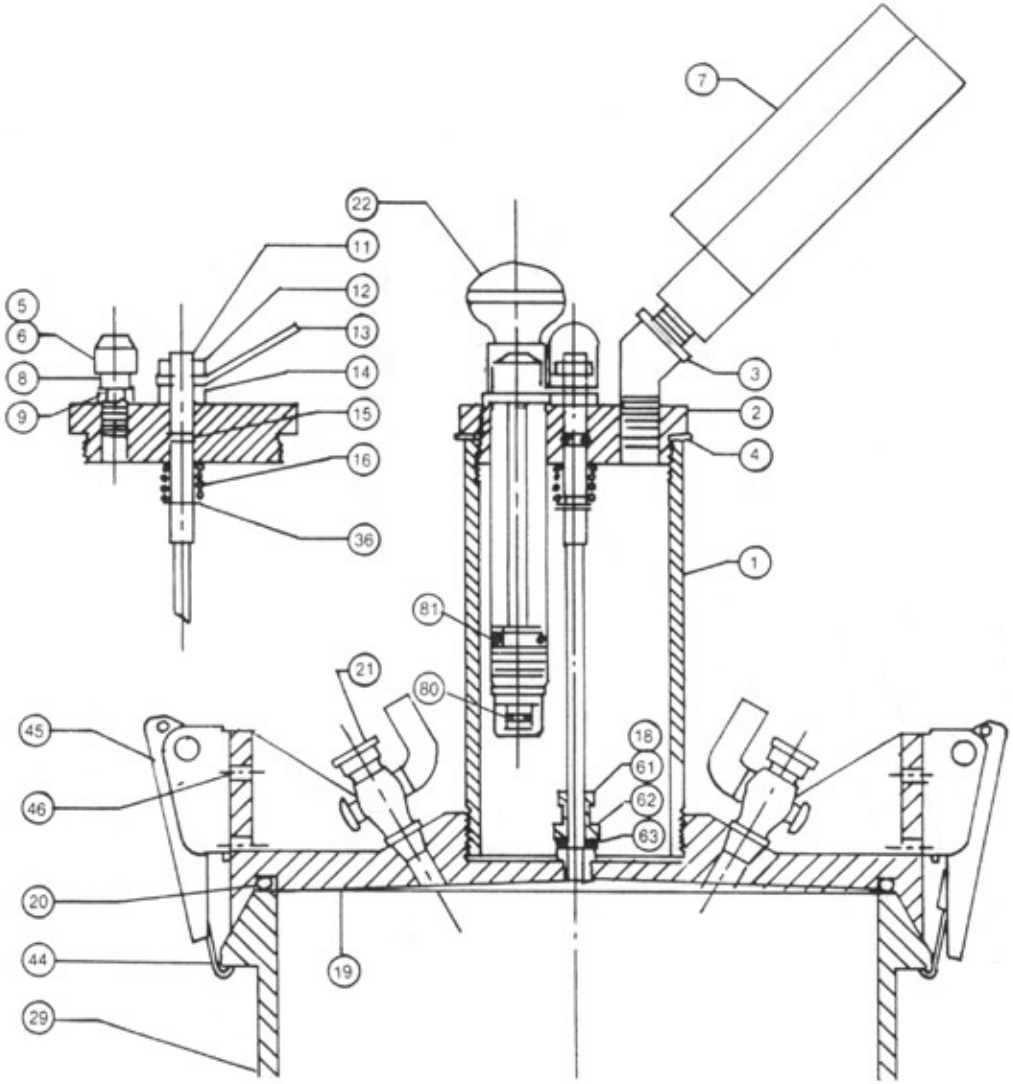

Item	Cat. No.	Description	Qty
-	LA-0280	Tamping rod	-
-	LA-0305-28	Syringe	-
1	LA-0316-01	Pressure chamber	1
2	LA-0316-02	Chamber cap	1
3	LA-0316-03	Chamber elbow	1
4	LA-0316-04	Chamber gasket	2
5	LA-0316-05	Air bleeder valve assembly	1
6	LA-0316-06	Air bleeder cap valve	1
7	LA-0316-07	Gage complete	1
8	LA-0316-08	Air bleeder stem valve	1
9	LA-0316-09	Air bleeder gasket valve	1
11	LA-0316-11	Needle valve stem	1
12	LA-0316-12	Needle valve nut	1
13	LA-0316-13	Needle valve lever	1
14	LA-0316-14	Needle valve spacer	1
15	LA-0316-15	Needle valve o'ring	1
16	LA-0316-16	Needle valve spring	1
18	LA-0316-18	Needle valve seat	1
61	LA-0316-61	5/16 in. 41WB nut	1
62	LA-0316-62	5/16 x 1/8 in. male connector	1
63	LA-0316-63	O'ring #2-201	1
19	LA-0316-19	Lid	1
20	LA-0316-20	O'ring lid seal	1
21	LA-0316-21	Lid petcock	2
22	LA-0316-22	Super-pump	1
-	LA-0316-23	Instruction label	1
29	LA-0316-29	Base, ,25 cu.ft	1
-	LA-0316-31	Calibration vessel	1
-	LA-0316-32	Calibration tube outside (bent)	1
-	LA-0316-33	Calibration tube inside	1
-	LA-0316-34	Strike-off bar	1
36	LA-0316-36	Needle valve stem snap ring	1
-	LA-0316-38	Carrying case	1
-	LA-0316-41	Replacement gauge glass	1
44	LA-0316-44	Latch tab	1
45	LA-0316-45	Lid assembly latch	4
46	LA-0316-46	Pan head screws, #10 x 0.5	12
-	LA-0316-60	Gasket repair kit	1
80	LA-0316-80	Super-pump o'ring valve seal	1
81	LA-0316-81	Piston seal	1

PUMP & O-RING

SUPERPUMP G/F FOLA 316

AIRM 2340 MODEL 2300

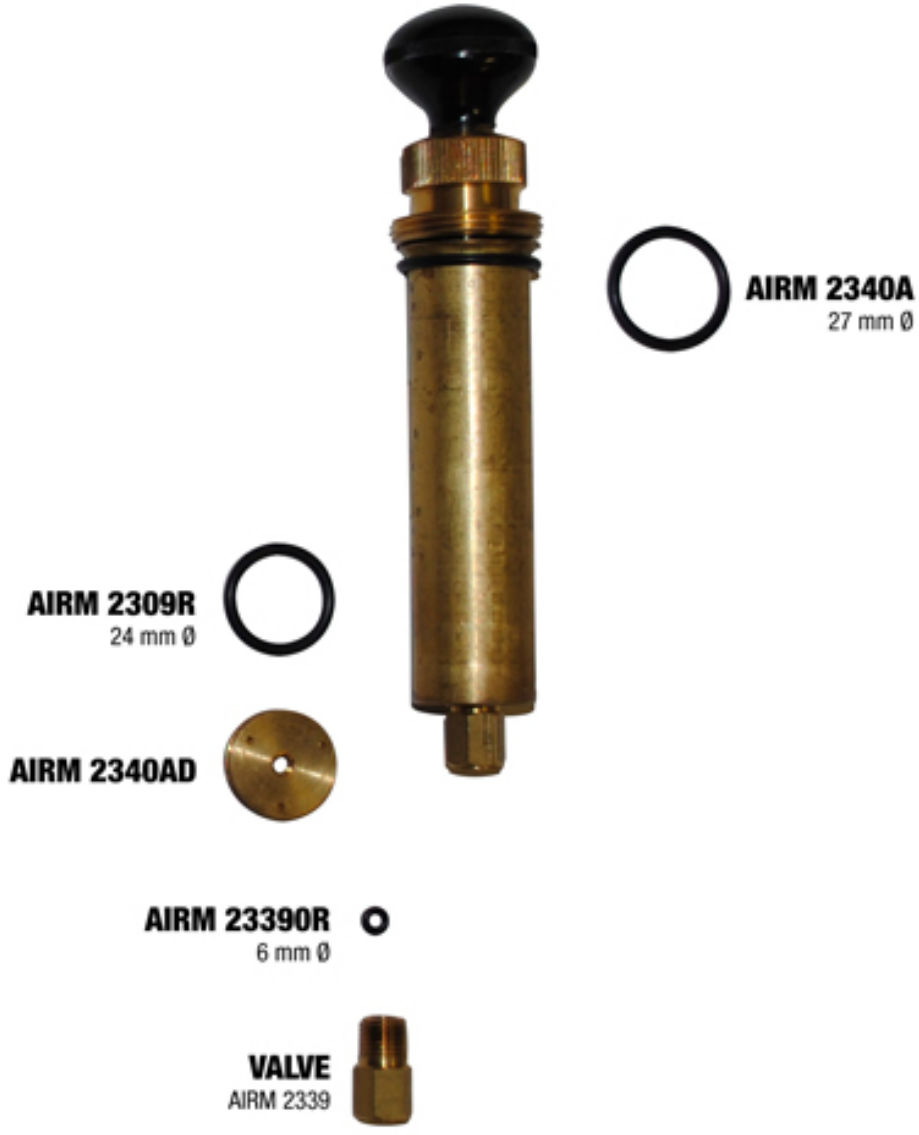

Charles R. Watts
Part number & name
for the Press-Ur-Meter

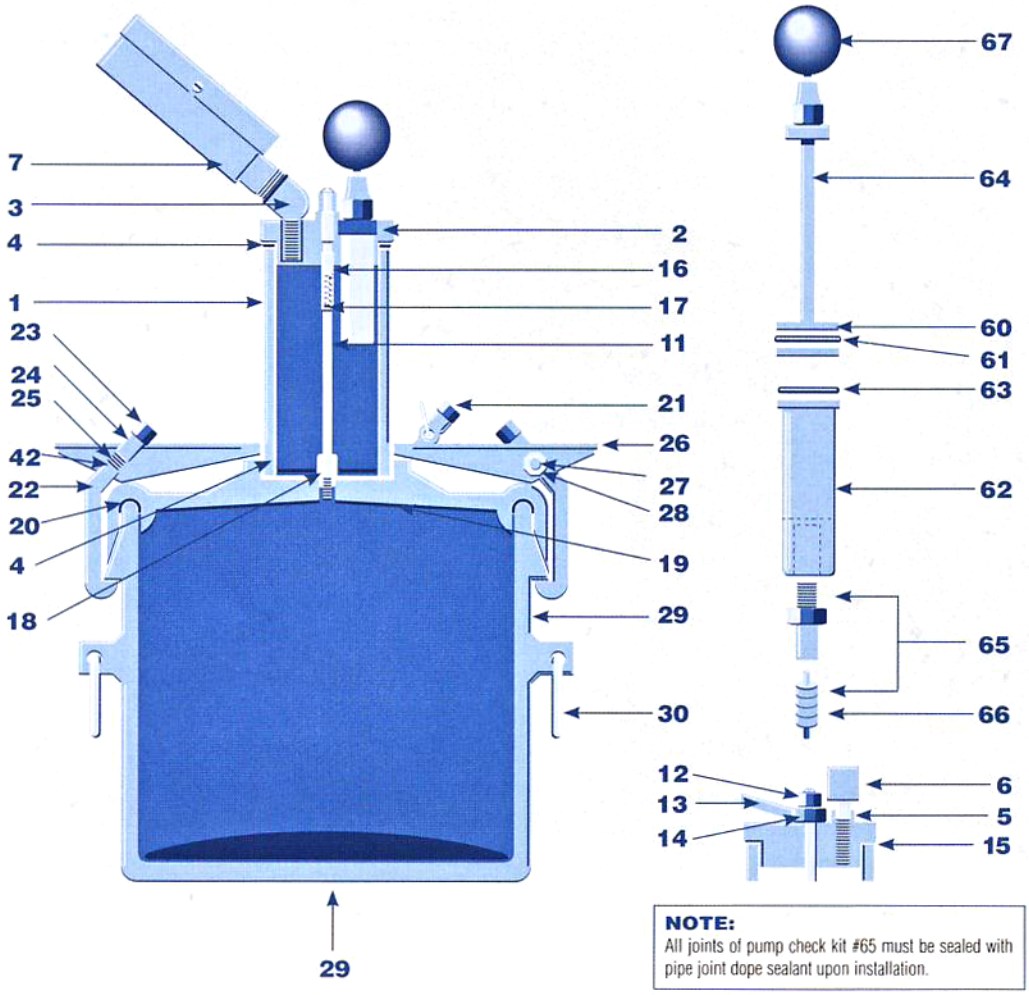

NOTE:
All joints of pump check kit #65 must be sealed with pipe joint dope sealant upon installation.

1	Pressure Chamber
2	Pressure Chamber Cap
3	Pressure Chamber Elbow
4	Pressure Chamber Gaskets
5	Pressure Chamber Air Release Stem
6	Pressure Chamber Air Release Cap
6A	(or #106) Release Cap Gasket
7	Complete Gauge
11	Needle Valve Stem
12	Needle Valve Nut
13	Needle Valve Lever
14	Needle Valve Spacer
15	Needle Valve "O" Ring
16	Needle Valve Spring
17	Needle Valve Spring Retainer
18	Needle Valve Seat Assembly
19	Cover
20	Cover "O" Ring
21	Cover Pet Cock
22	Clamp with Stud
23	Clamp Nut
24	Clamp Trunion
25	Clamp Spring
26	Clamp Toggle
27	Toggle Set Screw
28	Toggle Lock Nut
29	Base Only
30	Base Handle
31*	Calibrating Vessel
32*	Calibrating Tube (outer)
33*	Calibrating Tube (inner)
34*	Strike Off Bar
35*	Tamping Rod
36*	Syringe
37*	Gauge Glass
38*	Wood Carrying Case, Only
41	Needle Seat Gasket
42	Clamp Stud
60	Pump Piston Only, with Stem
61	Replacement "O" Ring
62	Pump Tube Assembly
63	Replacement "O" Ring
64	Pump Piston Assembly
65	Pump Check Kit
66	Check Core
67	Pump Piston Knob

*** Not Illustrated**

Airmeter Model CCL
Replacement Parts

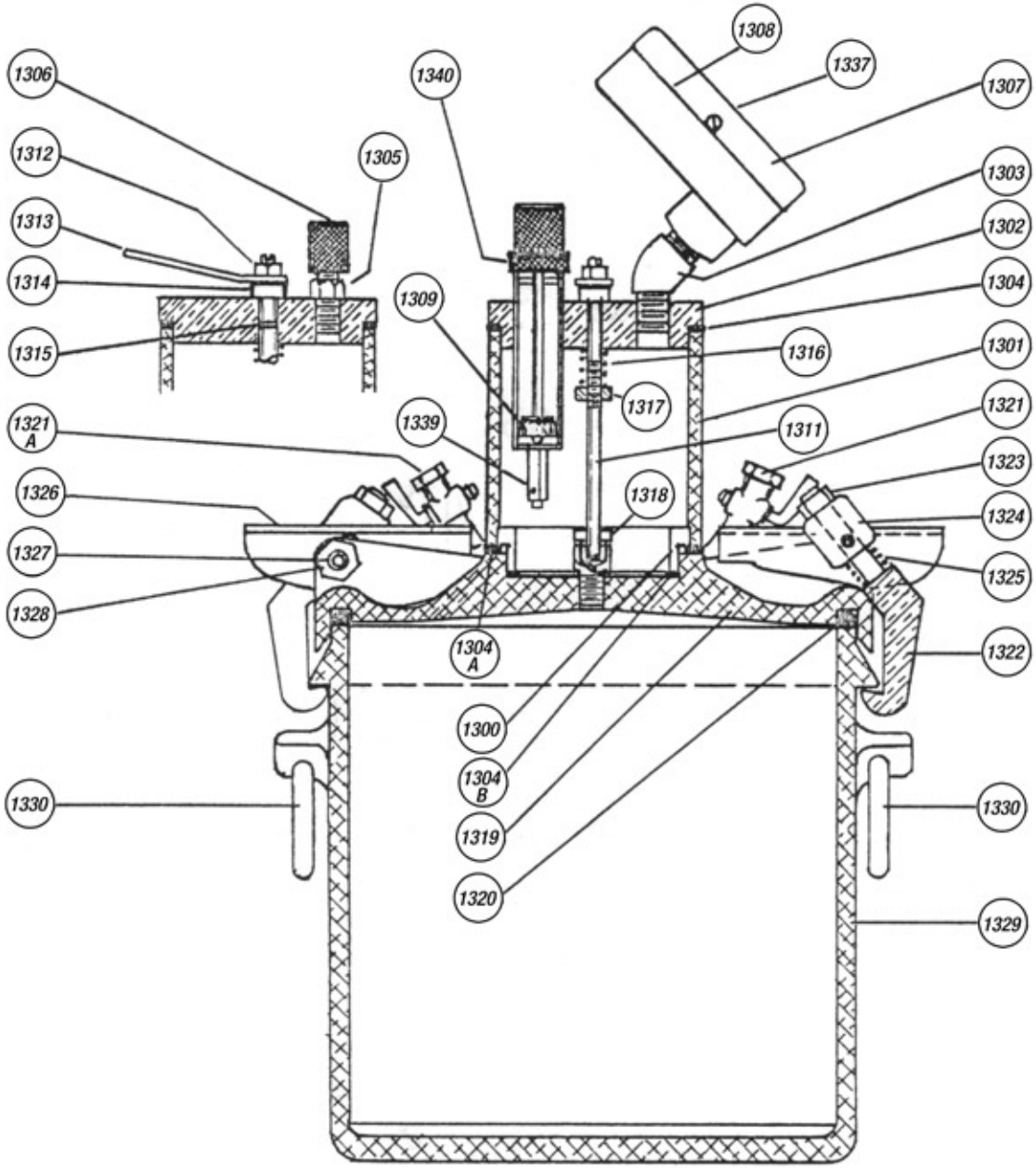

CAT. NO.	DESCRIPTION
1300	Pressure chamber adaptor
1301	Pressure chamber (modified)
1302	Pressure chamber cap (modified)
1303	Pressure chamber elbow
1304	Pressure chamber gasket top (modified)
1304A	Pressure chamber gasket bottom (modified)
1304B	Adaptor gasket
1305	Pressure chamber air release stem
1306	Pressure chamber air release cap
1307	Complete gauge
1308	Gauge glass gasket
1309	Pump piston leather
1311	Needle valve stem (modified)
1312	Needle valve nut
1313	Needle valve lever
1314	Needle valve spacer
1315	Needle valve o'ring
1316	Needle valve spring
1317	Needle valve spring retainer
1318	Needle valve seat assembly
1319	Cover
1320	Cover o'ring
1321	Cover pet cock threaded
1321A	Cover pet cock unthreaded
1322	Clamp
1323	Clamp nut
1324	Clamp trunion
1325	Clamp spring
1326	Clamp toggle (modified)
1327	Toggle set screw
1328	Toggle lock nut
1329	Base
1330	Base handles
1331	Calibrating vessel
1332	Calibrating tube (outer)
1333	Calibrating tube (inner)
1334	Strike off bar
1335	Tamping rod
1336	Syringe
1337	Gauge glass
1338	Carrying case
1339	Check valve assembly
1340	Air pump assembly